EI9GQ 16w pa draft (mods by vk3pe) p43

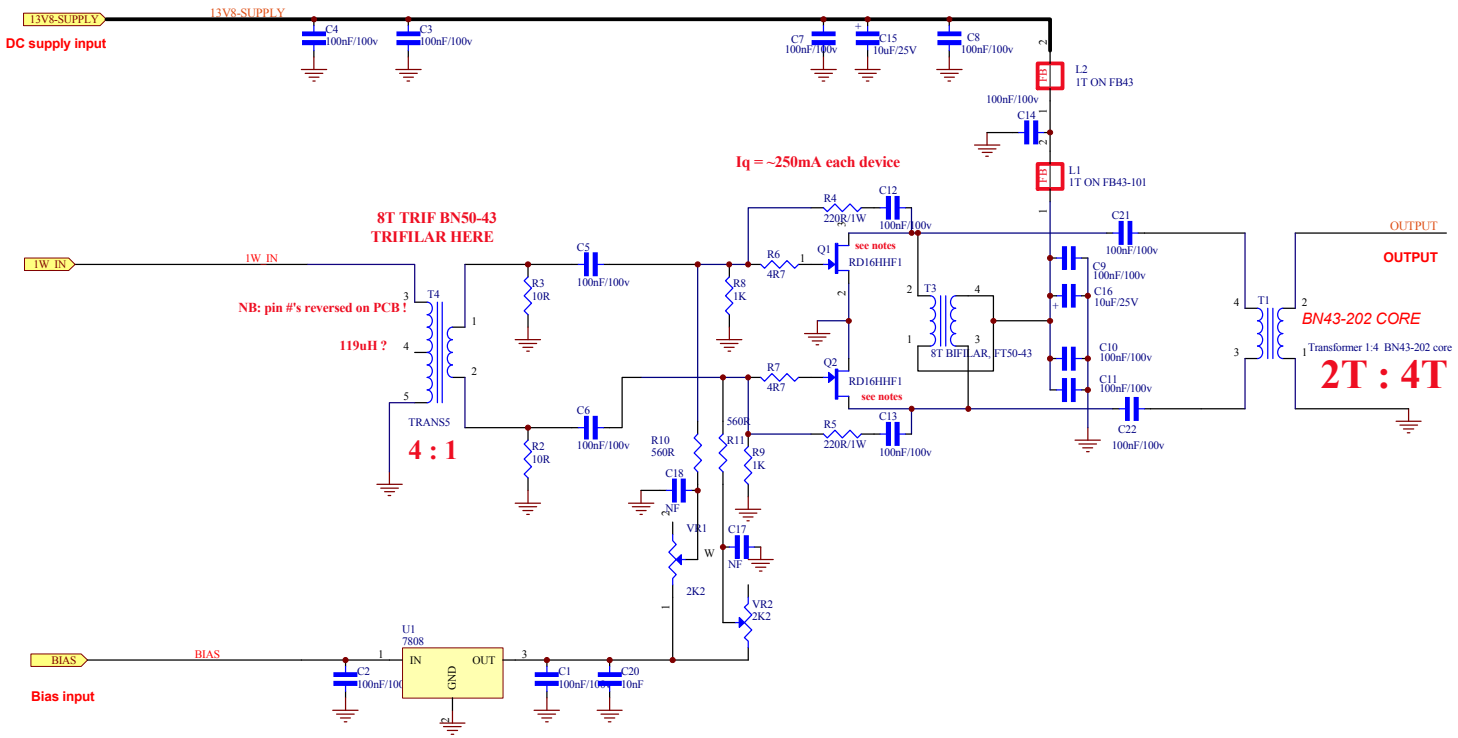

V3 jan 24th 2019 input trans was reversed !

correction R2 & 3 are 10R not 100R

V2 CHANGE THE INPUT TRANSF TO TRIFILAR WOUND

AND OUTPUT TO SINGLE BN43- CORE

This Sch was turned into a PCB on 17th Jan 2019

and sent to JLCPCB as a panel of 2

ordered from pcbway.com 5 for $10 no cost shipping, 050718

Title			
Size: A3	Date: 24-Dec-2020 Time: 14:33:38	Sheet 1 of 1	DRAWN BY: VK3PE

DRAWN VK3PE

(C) 2007-2018 and on

D:\PROJECTS 2018\EAMON HF RIG 20W PA\V3 jan 2019\EI9GQ____20W_PA_3 (1).Sch